PMMIS Data Model
Fee For Service Claims Subsystem

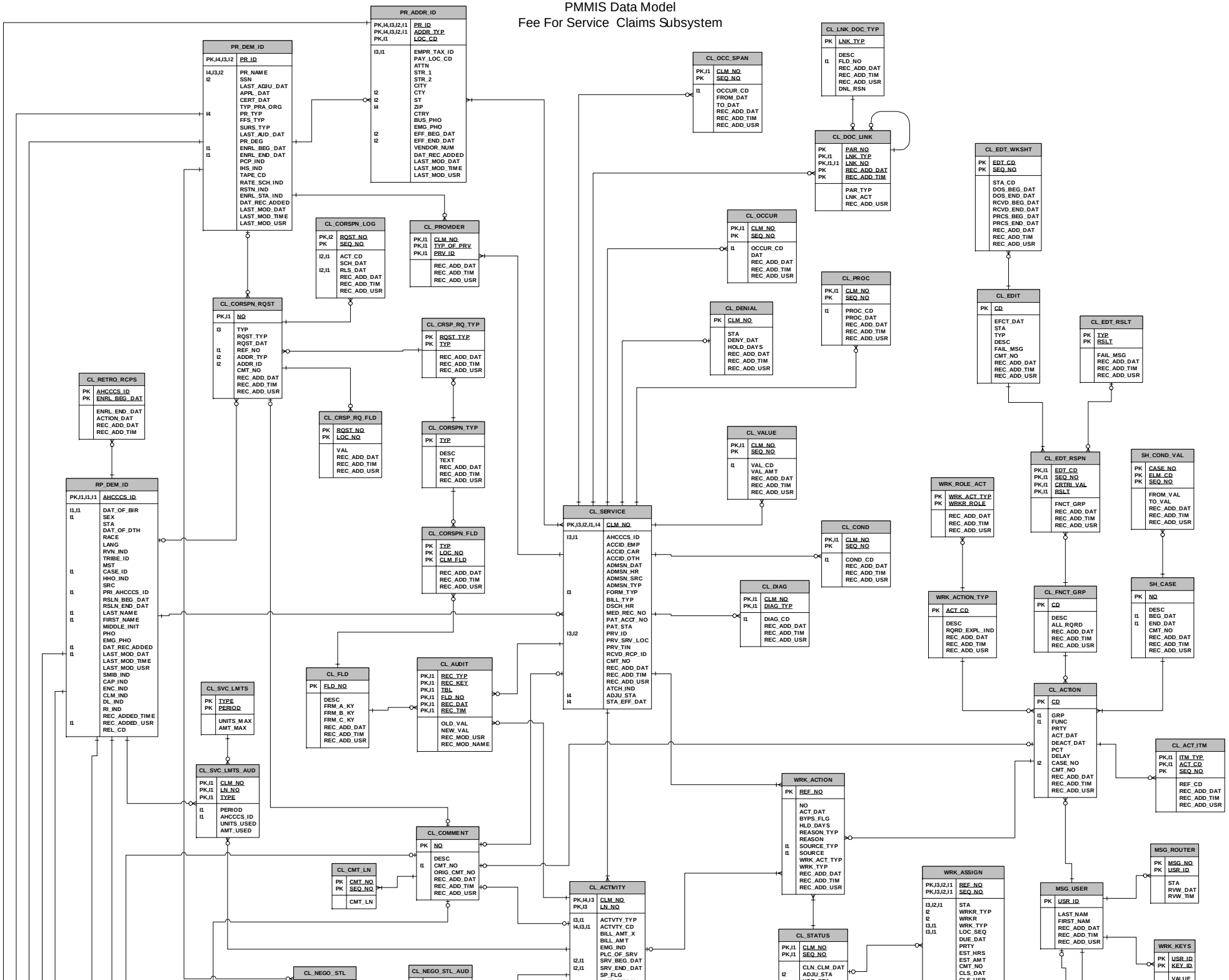

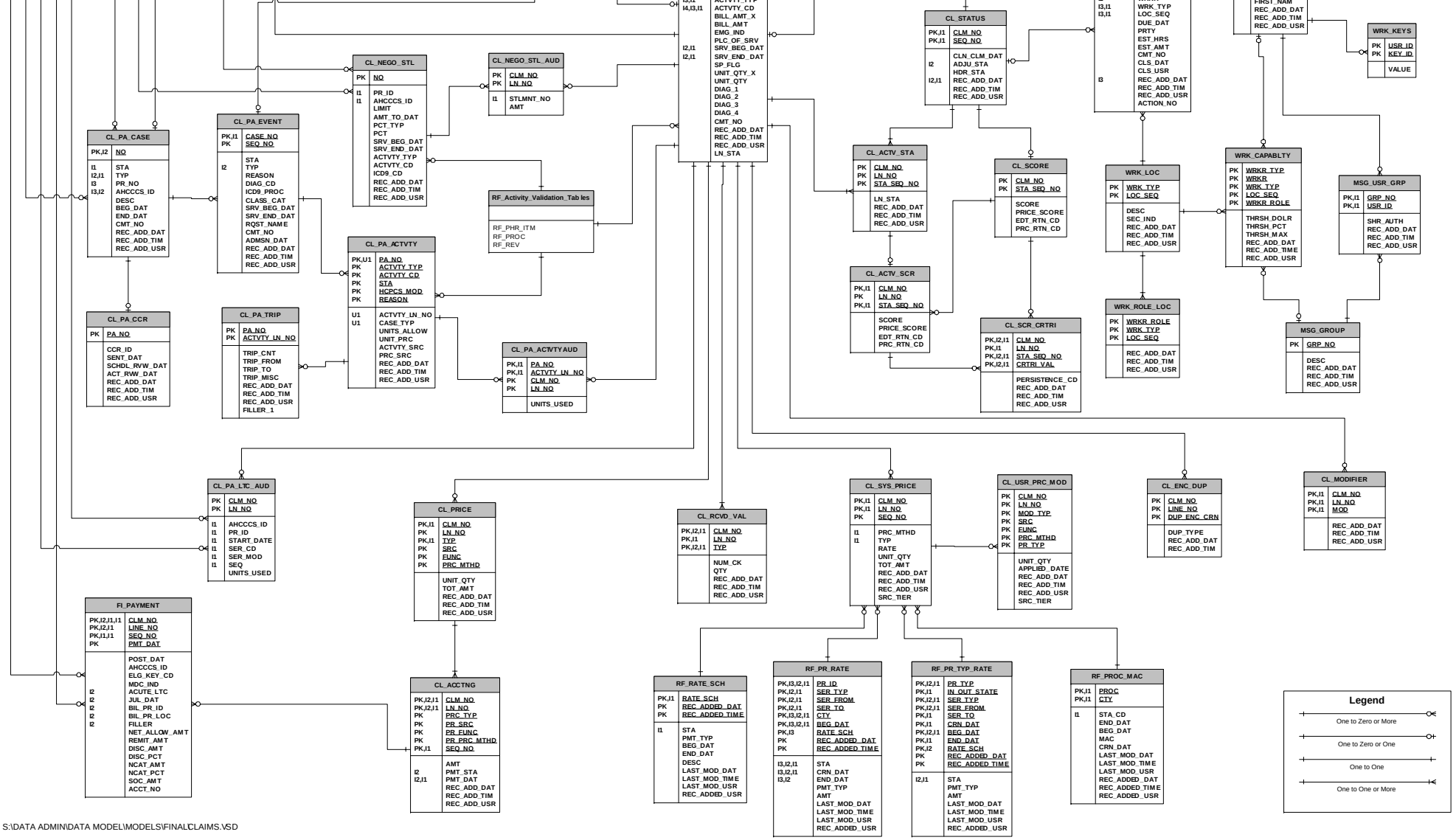

S:\DATA ADMIN\DATA MODEL\MODELS\FINAL\CLAIMS.VSD